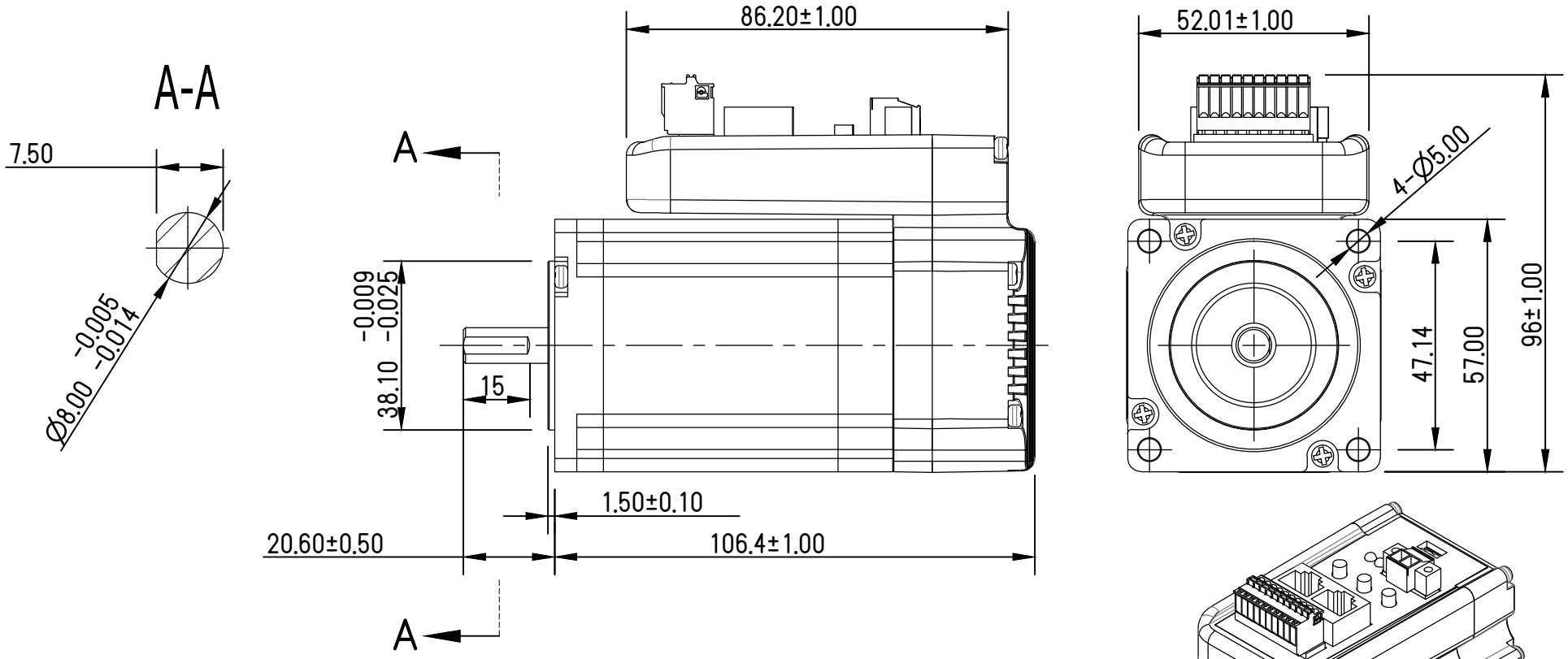

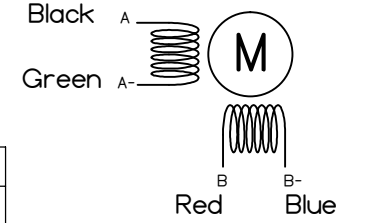

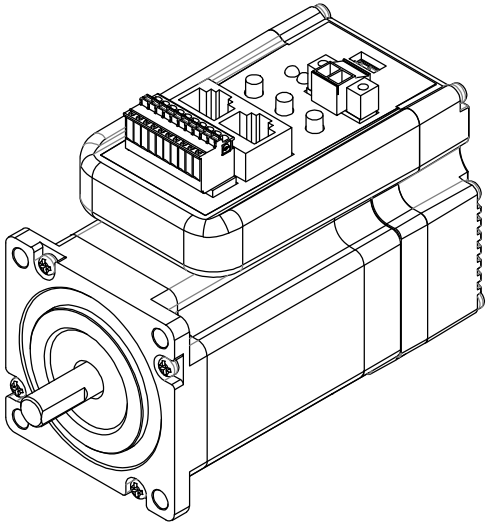

SPECIFICATION			
Input Voltage	20-50VDC	Weight	1300g
Number of phase	2	Dielectric Strength	500VDC
Step angle	1.8°	Insulation Resistance	100mΩ
Position Accuracy	1.8±0.09°	Insulation Class (UL)	F
Rated Current/phase	5.0A	Temperature Rise Max	80°C
Resistance/phase	0.39Ω±10%	Working Ambient Temperature	0-50°C
Inductance/phase	1.7MH±20%	Radial Play	0.025MM(LOAD450g)
Holding Torque	2.0 Nm	Axial Play	0.075MM(LOAD920g)
Rotate Inertia	480g.cm^2		

Dept.	Technical reference	Created by	Approved by
Mach Motion Products		Document type	Document status
		Title STIC57-36-20-RC	INTEGRATED STEPPER MOTOR
			Rev. / Date of issue / Sheet