REV	DESCRIPTION	DATE	APPROVE
P1	PRELIMINARY	20/01/04	WDP

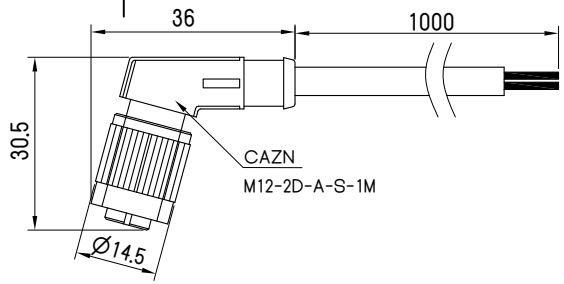

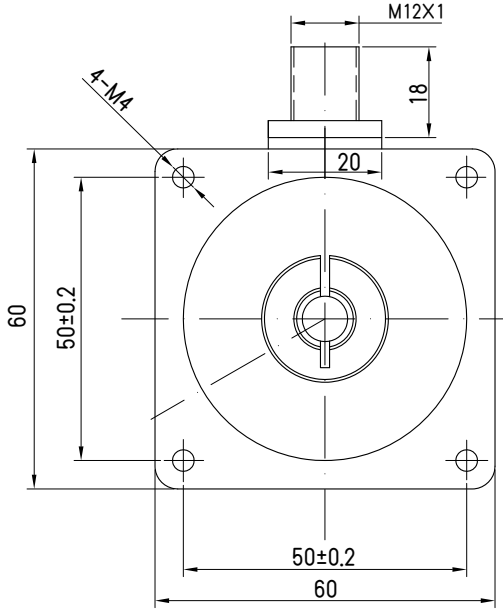

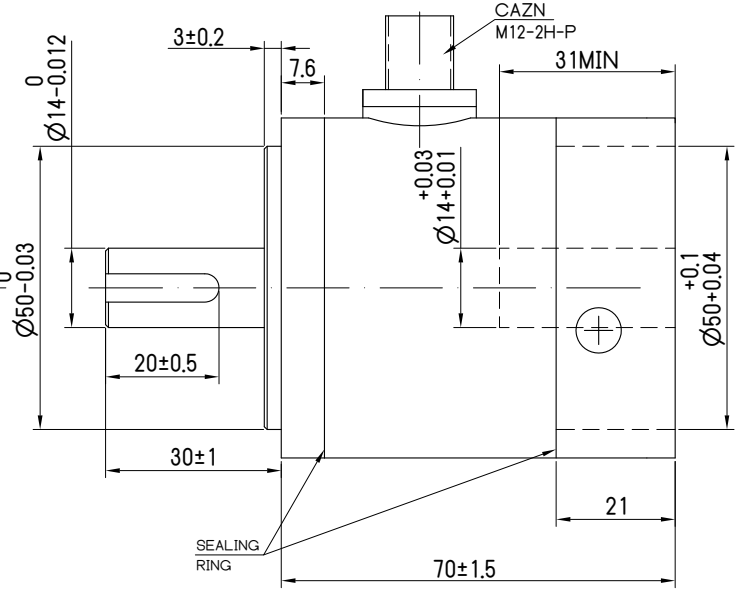

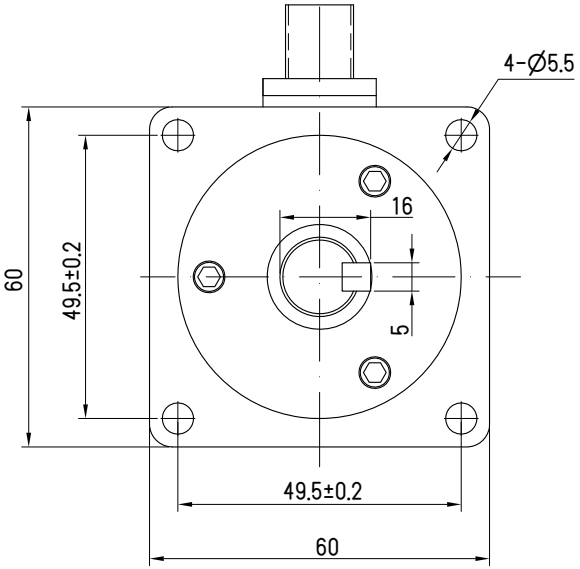

MOTOR INTERFACE

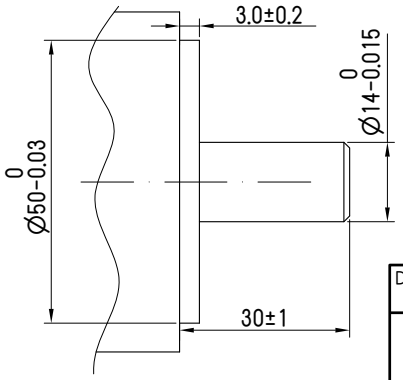

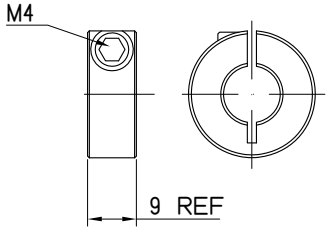

NOTE:

1. Voltage: 24VDC
2. Static Torque: 1.5Nm (min)
3. Rated Current: 0.46A
4. Power: 11W
5. Resistance: 82Ohms
6. Start Voltage: 22VDC (max)
7. Hi-pot: 500VAC/1s, 2mA
8. Power Off Brake

Dept.	Technical reference	Created by	Approved by
Mach Motion Products		Document type	Document status
		Title MBC024-24-002	BRAKE
			Rev. / Date of issue / Sheet